Instructions for use

MWL1093

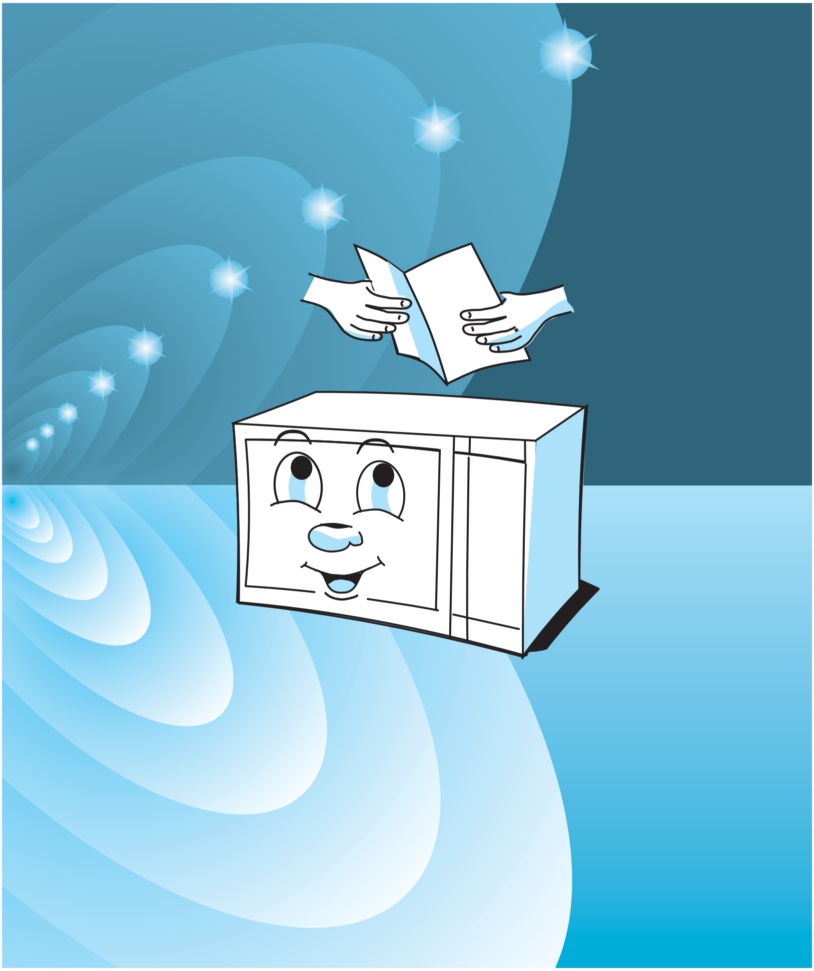

Whirlpool

Microwave Oven

INSTRUCTION MANUAL

MODEL:MWL1093

Read these instructions carefully before using your microwave oven, and keep it carefully.

If you follow the instructions, your oven will provide you with many years of good service.

SAVE THESE INSTRUCTIONS CAREFULLY

PRECAUTIONS TO AVOID POSSIBLE EXPOSURE TO EXCESSIVE MICROWAVE ENERGY

(a) Do not attempt to operate this oven with the door open since this can result in harmful exposure to microwave energy. It is important not to break or tamper with the safety interlocks.

(b) Do not place any object between the oven front face and the door or allow soil or cleaner residue to accumulate on sealing surfaces.

(c) WARNING: If the door or door seals are damaged, the oven must not be operated until it has been repaired by a competent person.

ADDENDUM

If the apparatus is not maintained in a good state of cleanliness, its surface could be degraded and affect the lifespan of the apparatus and lead to a dangerous situation.

Specifications

Model:	MWL1093
Rated Voltage:	220V-230V / 50Hz
Rated Input Power(Microwave):	1450W
Rated Output Power(Microwave):	900W
Rated Input (Grill):	1100W
Rated Input (Convection):	2500W
Oven Capacity:	30L
Turntable Diameter:	∅ 315mm
External Dimensions(LxWxH):	520X510X335 mm
Net Weight:	Approx.18.5 kg

IMPORTANT SAFETY INSTRUCTIONS WARNING

To reduce the risk of fire, electric shock, injury to persons or exposure to excessive microwave oven energy when using your appliance, follow basic precautions, including the following:

1. When heating beverages or water in your microwave oven, overheating of the liquid beyond boiling point can occur without evidence of bubbling. This could result in a sudden boil over of the hot liquid. To prevent this possibility the following steps should be taken:
   1) Avoid using straight-sided containers with narrow necks.
   2) Stir the liquid before placing the container in the oven and let the teaspoon remain in the container.
   3) After heating, allow standing for a short time,stirring again before carefully removing the container from the oven.
2. Warning: It is hazardous for anyone other than a competent person to carry out any service or repair operation that involves the removal of a cover which gives protection against exposure to microwave energy.
3. Warning: Only allow children to use the oven without supervision when adequate instructions have been given so that the child is able to use the oven in a safe way and understand the hazards of improper use.
4. Warning: When the appliance is operated in the combination mode, children should only use the oven under adult supervision due to the temperatures generated. (only for grill series)
5. Only use utensils suitable for use in microwave ovens.
6. The oven should be cleaned regularly and any food deposits should be removed.
7. Read and follow the specific:"PRECAU-TIONS TO AVOID POSSIBLE EXPOSURE TO EXCESSIVE MICROWAVE ENERGY".
8. When heating food in plastic or paper containers, keep an eye on the oven due to the possibility of ignition.
9. If smoke is observed, switch off or unplug the appliance and keep the door closed in order to stifle any flames.
10. Do not overcook food.
11. Do not use the oven cavity for storage purposes. Do not store items, such as bread, cookies, etc. inside the oven.
12. Remove wire twist-ties and metal handles from paper or plastic containers/bags before placing them in the oven.
13. Install or locate this oven only in accordance with the installation instructions provided.
14. Eggs in the shell and whole hard-boiled eggs should not be heated in microwave ovens since they may explode, even after microwave heating has ended.
15. Use this appliance only for its intended uses as described in manual. Do not use corrosive chemicals or vapors in this appliance. This oven is especially designed to heat. It is not designed for industrial or laboratory use.
16. If the supply cord is damaged, it must be replaced by the manufacturer, its service agent or similarly qualified persons in order to avoid a hazard.
17. Do not store or use this appliance outdoors.
18. Do not use this oven near water, in a wet basement or near a swimming pool.
19. The temperature of accessible surfaces may be high when the appliance is operating. The surfaces are liable to get hot during use .Keep cord away from heated surface, and do not cover any ventilation openings on the oven.

20. Do not let cord hang over edge of table or counter.
21. Failure to maintain the oven in a clean condition could lead to deterioration of the surface that could adversely affect the life of the appliance and possibly result in a hazardous situation.
22. The contents of feeding bottles and After heating baby food or liquids in a baby food jar,always stir and check the temperature before serving. This will ensure that the heat is evenly distributed and the risk of scalding or burns can be avoided. Ensure the Lid and the Teat is removed before heating!
23. The appliance is not intended for use by persons (including children) with reduced physical , sensory or mental capabilities, or lack of experience and knowledge, unless they have been given supervision or instruction concerning use of the appliance by a person responsible for their safety.
24. Children should be supervised to ensure that they do not play with the appliance.
25. The microwave oven shall not be placed in a cabinet unless it has been tested in a cabinet.
26. The appliances are not intended to be operated by means of an external timer or separate remote-control system.
27. WARNING: Ensure that the appliance is switched off before replacing the lamp to avoid the possibility of electric shock.
28. Accessible parts may become hot during use. Young children should be kept away steam cleaner is not to be used.
29. Surface of a storage drawer can get hot.
30. Do not use harsh abrasive cleaners or sharp metal scrapers to clean the oven door glass since they can scratch the surface, which may result in shattering of the glass.
31. During use the appliance becomes hot. Care should be taken to avoid touching heating elements inside the oven.
32. Only use the temperature probe recommended for this oven.(for ovens provided with a facility to use a temperature-sensing probe.)
33. The rear surface of appliance shall be placed against a wall.

To Reduce the Risk of Injury to Persons
Grounding Installation

DANGER

Electric Shock Hazard
Touching some of the internal components can cause serious personal injury or death. Do not disassemble this appliance.

WARNING

Electric Shock Hazard
Improper use of the grounding can result in electric shock. Do not plug into an outlet until appliance is properly installed and grounded.

CLEANING

Before cleaning the oven be sure to disconnect it from the power supply.

1. Clean the inside of the oven after using with a slightly damp cloth.
2. Clean the accessories in the usual way in soapy water.
3. The door frame and seal and neighbouring parts must be cleaned carefully with a damp cloth when they are dirty.

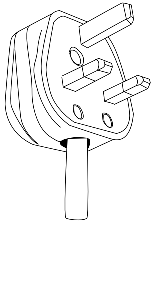

This appliance must be grounded. In the event of an electrical short circuit, grounding reduces the risk of electric shock by providing an escape wire for the electric current. This appliance is equipped with a cord having a grounding wire with a grounding plug. The plug must be plugged into an outlet that is properly installed and grounded.

The earthing of this appliance is compulsory. The manufacturer will accept no responsibility for injury to persons, animals or damage to objects arising from the non-observance of this requirement.

Consult a qualified electrician or serviceman if the grounding instructions are not completely understood or if doubt exists as to whether the appliance is properly grounded.

UTENSILS

CAUTION

Personal Injury Hazard

It is hazardous for anyone other than a compentent person to carry out any service or repair operation that involves the removal of a cover which gives protection against exposure to microwave energy.

See the instructions on "Materials you can use in microwave oven or to be avoided in microwave oven." There may be certain non-metallic utensils that are not safe to use for microwaving. If in doubt, you can test the utensil in question following the procedure below.

Utensil Test:

1. Fill a microwave-safe container with 1 cup of cold water (250ml) along with the utensil in question.
2. Cook on maximum power for 1 minute.
3. Carefully feel the utensil. If the empty utensil is warm, do not use it for microwave cooking.
4. Do not exceed 1 minute cooking time.

Materials you can use in microwave oven

Utensils	Remarks
Aluminum foil	Shielding only. Small smooth pieces can be used to cover thin parts of meat or poultry to prevent overcooking. Arcing can occur if foil is too close to oven walls. The foil should be at least 1 inch (2.5cm) away from oven walls.
Browning dish	Follow manufacturer’s instructions. The bottom of browning dish must be at least 3/16 inch (5mm) above the turntable. Incorrect usage may cause the turntable to break.
Dinnerware	Microwave-safe only. Follow manufacturer's instructions. Do not use cracked or chipped dishes.
Glass jars	Always remove lid. Use only to heat food until just warm. Most glass jars are not heat resistant and may break.
Glassware	Heat-resistant oven glassware only. Make sure there is no metallic trim. Do not use cracked or chipped dishes.
Oven cooking bags	Follow manufacturer’s instructions. Do not close with metal tie. Make slits to allow steam to escape.
Paper plates and cups	Use for short–term cooking/warming only. Do not leave oven unattended while cooking.
Paper towels	Use to cover food for reheating and absorbing fat. Use with supervision for a short-term cooking only.
Parchment paper	Use as a cover to prevent splattering or a wrap for steaming.
Plastic	Microwave-safe only. Follow the manufacturer’s instructions. Should be labeled "Microwave Safe". Some plastic containers soften, as the food inside gets hot. "Boiling bags" and tightly closed plastic bags should be slit, pierced or vented as directed by package.
Plastic wrap	Microwave-safe only. Use to cover food during cooking to retain moisture. Do not allow plastic wrap to touch food.
Thermometers	Microwave-safe only (meat and candy thermometers).
Wax paper	Use as a cover to prevent splattering and retain moisture.

Materials to be avoided in microwave oven

Utensils	Remarks
Aluminum tray	May cause arcing. Transfer food into microwave-safe dish.
Food carton with metal handle	May cause arcing. Transfer food into microwave-safe dish.
Metal or metal-trimmed utensils	Metal shields the food from microwave energy. Metal trim may cause arcing.
Metal twist ties	May cause arcing and could cause a fire in the oven.
Paper bags	May cause a fire in the oven.
Plastic foam	Plastic foam may melt or contaminate the liquid inside when exposed to high temperature.
Wood	Wood will dry out when used in the microwave oven and may split or crack.

SETTING UP YOUR OVEN

Names of Oven Parts and Accessories

Remove the oven and all materials from the carton and oven cavity.

Your oven comes with the following accessories:

Glass tray	1
Turntable ring assembly	1
Instruction Manual	1

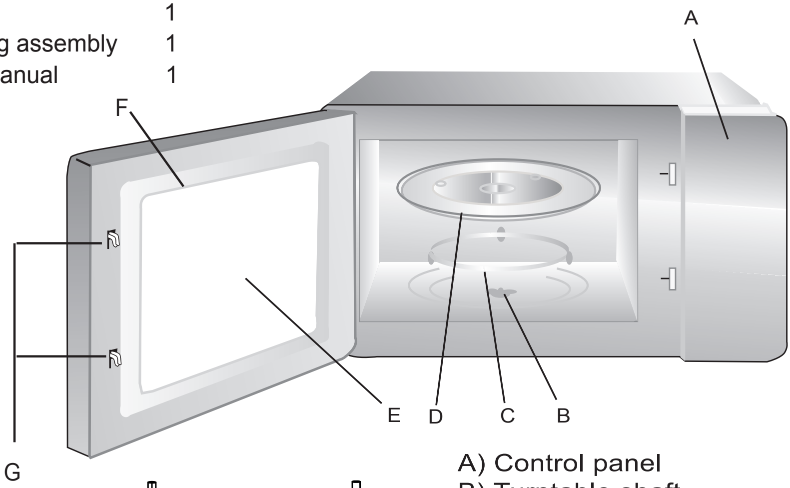

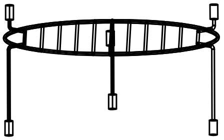

Grill Rack (Only for Grill series)

A) Control panel
B) Turntable shaft
C) Turntable ring assembly
D) Glass tray
E) Observation window
F) Door assembly
G) Safety interlock system
H) Grill Rack (Only for Grill series)

Turntable Installation

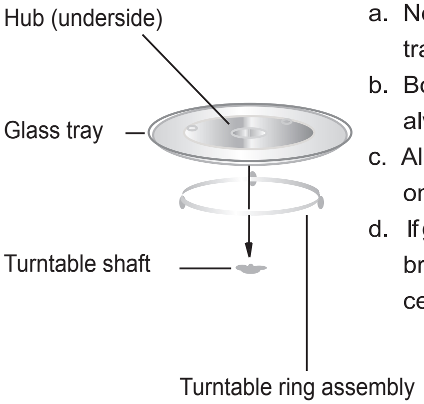

a. Never place the glass tray upside down. The glass tray should turn freely.

b. Both glass tray and turntable ring assembly must always be used during cooking.

c. All food and containers of food are always placed on the glass tray for cooking.

d. If glass tray or turntable ring assembly cracks or breaks, contact your nearest authorized service center.

Countertop Installation

Remove all packing material and accessories. Examine the oven for any damage such as dents or broken door. Do not install if oven is damaged.

Cabinet: Remove any protective film found on the microwave oven cabinet surface. Do not remove the light brown Mica cover that is attached to the oven cavity to protect the magnetron.

Installation

1. Select a level surface that provide enough open space for the intake and/or outlet vents.

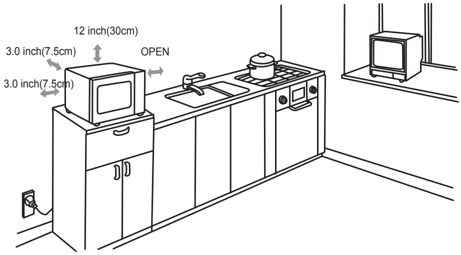

A minimum clearance of 3.0 inches (7.5cm) is required between the oven and any adjacent walls. One side must be open.

(1) Leave a minimum clearance of 12 inches (30cm) above the oven.

(2) Do not remove the legs from the bottom of the oven.

(3) Blocking the intake and/or outlet openings can damage the oven.

(4) Place the oven as far away from radios and TV as possible. Operation of microwave oven may cause interference to your radio or TV reception.

2. Plug your oven into a standard household outlet. Be sure the voltage and the frequency is the same as the voltage and the frequency on the rating label.

WARNING: Do not install oven over a range cooktop or other heat-producing appliance. If installed near or over a heat source, the oven could be damaged and the warranty would be void.

The accessible surface may be hot during operation.

The temperature of accessible surfaces of the grill rack may be high when the appliance is operating.

OPERATION

Control Panel and Features

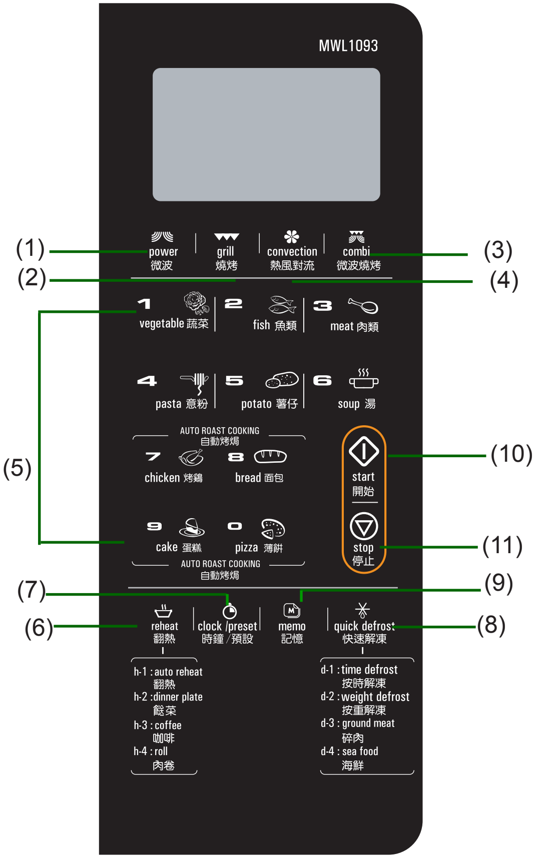

(1) Power Function
(2) Grill Function
(3) Combi. Function
(4) Convection Function
(5) Auto Menu
(6) Reheat Function
(7) Clock/Preset Function
(8) Quick Defrost
(9) Memory Function
(10) Start
(11) Stop

OPERATION INSTRUCTION

1.Clock Setting

When the microwave oven is electrified,the oven will display "0:00", buzzer will ring once. The input time should be within 0:00--23:59(24 Hour); 1:00--12:59(12 Hour).

Example: To set 12:12 .

(1) Press " " once to select 24 hours system and twice for 12 hours system, at the same time, "24H" or "12H" will display.

(2) Press the number buttons of "1","2","1","2" in order.

(3) Press " " to finish clock setting. ":" will flash, and the time will light.

Note: 1) If the clock is not set, it would not function when powered.

2) During the process of clock setting, if you press " ", the oven will go back to the previous status automatically.

2. Microwave Cooking

Select different microwave power level and set cooking time as you wish. There are five power levels available for choosing. Keep on pressing " " to choose the power .

Example: If you want to use 80% microwave power to cook for 10 minutes, you can operate the oven as the following steps.

1) Press " " once, the oven will display "P100", " " indicator will light.

2) Press " " once again to choose 80% power, the oven will display "P80".

3) Press the number buttons of "1","0","0","0" in order, the oven will display "10:00"

4) Press " " to start cooking, ":" will light and the " " indicator will flash.

Note: " " Pad presses instructions

Presses Instructions	Display	Microwave Power
1	P100	100%
2	P 80	80%
3	P 50	50%
4	P 30	30%
5	P 10	10%

3. Grill Cooking

Example: If you want to use 100% to cooking for 35 minutes, you can operate the oven as the following steps.

1) Press the " " key , the oven will display " G-1 ", at the same time " " will light.

2) Press the number buttons of "3","5","0","0" in order, the oven will display "35:00"

3) Press the " " key to start cooking. The" " will flash, ":" will light.

Note:If half the grill time passes, the oven sounds twice, and this is normal.
In order to have a better effect of grilling food, you should turn the food over, close the door, and then press"**START** " to continue cooking.
If no operation, the oven will not pause.

4. Convection Cooking(With preheating function)

1) Press the " " key once, the oven will display "140".
At the same time, " °C " , " " will light. (Press the " ." key several times to select the temperature.)

2) Press the " " key to start cooking. The temperature figure will flash when reach to the temperature in advance and buzzer will ring twice to remind you to put the food into the oven.

3) Press the number buttons of "4","0","0","0" in order, the oven will display "40:00"

4) Press the " " key to start cooking. The " " will flash, ":" will light.

5. Convection Cooking(Without preheating function)

1) Press the " " key. once, the oven will display "140".
At the same time, " °C " , " " will light. (Press the " ." key several times to select the temperature.)

2) Press the number buttons of "4", "0", "0", "0" in order, the oven will display "40:00".

3) Press the " " key to start cooking. The " " will flash, ":" will light.

Note: " " Pad presses instructions

Presses Instructions	Display	Convection
1	140^0C	●
2	150^0C	●

3	$160^{0}C$	●
4	$170^{0}C$	●
5	$180^{0}C$	●
6	$190^{0}C$	●
7	$200^{0}C$	●
8	$210^{0}C$	●
9	$220^{0}C$	●
10	$230^{0}C$	●

6. Combination Cooking

Example: If you want to use combination to cook (C-1) for 40 minutes, you can operate the oven as per the following steps.

1) Press the " " key once, the oven will display "C-1". At the same time, " " and " " will light.
2) Press the number buttons of "4", "0", "0", "0" in order, the oven will display "40:00".
3) Press the " " key to start cooking. The " " , " " will flash, ":" will light.

Note: " " Pad presses instructions

Presses Instructions	Display	Microwave Power	Grill Power	Convection Power
1	C-1	●		●
2	C-2	●	●	
3	C-3		●	●
4	C-4	●	●	●

7. Delay Start

Example: To start a cooking at 12:12.

(1) First, set the clock, then set the cooking program you want(not including defrost functon).

(2) Press " " to display 0:00.

(3) Press "1", "2", "1", "2" in order.

(4) Press " " to confirm the setting. The unit will display the current time, ":" will light, and any indicator will not light.

(5) Cooks begin when the time set arrives and the cooking indicator will flash.

Note: During the Delay Start function, any cooking can not been operated. And you can press " " to cancel the function.

8. Reheat

1) Press " " pad , the "h-1" will display in oven and flash." " and " AUTO " indicators will light(Press the " " pad several times to select the the cooking program you wanted.)

---

2) Press " " key to confirm,the "h-1" will display.

---

3) Press " " pad , the oven will display "150"." " and "AUTO " and "g" indicators will light.(Press the " " pad several times to select the the weight of thecooking food.)

---

4) Press " " key to start cooking.

Reheat Chart

Menu	Weight(g)	Display
h-1 (Auto Reheat)	150	150
	250	250
	350	350
	450	450
	600	600
h-2 (Dinner Plate)	250	250
	350	350
	450	450
h-3 (Coffee)	1(approximately 240g)	1
	2(approximately 480g)	2
	3(approximately 720g)	3
h-4 (Roll)	1(approximately 70g)	1
	2(approximately 140g)	2
	3(approximately 210g)	3

9. Defrost By time

1) Press " " once, the oven will display "d-1".

2) Input the figure of the time of cooking. " " , " " indicators will light. (the maximum cooking time is 99 minutes and 99 seconds.)

3) Press " " key to start defrosting. " " and " " indicators will flash .

10. Defrost By weight

1) Press " " pad twice, the oven will display "d-2".

2) Input the figure of the weight of food.
(The input figure of the weight should be within 100--2000g)

3) Press " " key to start defrosting. " " and " " indicators will flash and "g" indicator will go out.

11. Defrost Groud meat

1) Press " " pad thrice, the oven will display "d-3".

2) Input the figure of the weight of food.
(The input figure of the weight should be within 100--2000g)

3) Press " " key to start defrosting. " " and " " indicators will flash .

12. Defrost Sea food

1) Press " " pad 4 times, the oven will display "d-4".

2) Input the figure of the weight of food.
(The input figure of the weight should be within 100--2000g)

3) Press " " key to start defrosting. " " and " " indicators will flash .

13. Auto Menu Cooking

The numeral pads 0—9 are matching with ten different subjects respectively;

Pad	Cook	Pad	Cook	Pad	Cook	Pad	Cook
1	VEGETABLE	4	PASTA	7	ROAST CHICKEN	0	PIZZA
2	FISH	5	POTATO	8	BREAD		
3	MEAT	6	SOUP	9	CAKE		

Example: Cooking vegetable of 350g:

(1) Press " " button, " " and " AUTO " will light.

(2) Press " " button again to choose weight, oven will display "350", "g", " " and " AUTO " will light.

(3) Press " " to start cooking, "g" will go out, time counts down, " " and and " AUTO " will flash.

Auto menu Chart

Menu	Weight(g)	Press Times	Display
	150	Once	150
	350	Twice	350
	500	Thrice	500
	150	Once	150
	250	Twice	250
	350	Thrice	350
	450	4 times	450
	650	5 times	650
	150	Once	150
	300	Twice	300
	450	Thrice	450
	600	4 times	600
	50(with cold water 450ml)	Once	50
	100(with cold water 800ml)	Twice	100
	150(with cold water 1200ml)	Thrice	150
	1(approximately230g)	Once	1
	2(approximately460g)	Twice	2
	3(approximately690g)	Thrice	3
	200ml	Once	200
	400ml	Twice	400
	600ml	Thrice	600
	500	Once	500
	750	Twice	750
	1000	Thrice	1000
	1200	4 times	1200
	50g	Once	50
	100g	Twice	100
	150g	Thrice	150
	475g	Once	475
	200g	Once	200
	300g	Twice	300
	400g	Thrice	400

Note: Cake menu is under convection cooking with 180℃-warm-up function, and you should preheat first following the auto menu operation, when the oven reaches the temperature, it will stop working and sound to remind opening the door to put cake in, then press " " to start cooking.

14.MEMORY

1) Press " " key several times to set "memory 1" to "memory 3" program, and the oven will display "1", to "3".
2) Set one or two stages program you want.
   Example:a) Press " " once to choose 100% microwave power;
   b) Press number keys "1","0","0","0" in order to adjust the cooking time;
3) Press " " key to save the memory program setted, or press " " to start cooking and save the program automatically.
4) Next time when you want to cook with the memory program which has been set, you just only need to press " " key to choose the program wanted and then press " " to start cooking.

15.Multi-Stage Cooking

Two stages of cooking can be maximumly set. If one of the stages is defrosting, it should be put in the first stage, and auto cooking should not be set here. The buzzer will ring once after each stage and the next stage will begin, and auto cooking should not be set here.

Example: If you want to cook the food with 100% microwave power for 10 minutes+ 80% microwave power for 15 minutes. Do it as following:

1) Press " " once to choose 100% microwave power;
2) Press number keys "1","0","0","0" in order to adjust the cooking time;
3) Press " " twice to choose 80% microwave power;
4) Press number keys "1","5","0","0" in order to adjust the cooking time;
5) Press " " to start cooking.

16. Speedy Cooking

When the oven is in the waiting states, Press " " key to start cooking with full microwave power for 30 seconds.(the maximum setting is 99 minutes and 99 senonds)
When the oven is in the combination cooking states, Press " " key to add 30 seconds cooking time.(invalid in the Defrost d-2,d-3,d-4, Multi-stage cooking or Auto Menu state)

17. Inquiring Function

(1) In cooking state, press " ", the current power will be displayed for 2~3 seconds.

press " "," C-1"-"C-4"will be displayed for 2~3 seconds.

press " "," $140^{0}C$"-"$230^{0}C$" will be displayed for 2~3 seconds.

(2) In cooking state, press " " to inquire the time for cooking. The cooking time will flash for 2-3 seconds.

(3) In pre-set state, press " " to inquire the time for delay start cooking. The pre-set time will flash for 2-3 seconds.

18. Lock-out Function for Children

Lock: With the door closed, no operation in 1 minute in stand by mode or in 11 minutes after the end of cooking there will be a long "beep" denoting entering into the children-lock state and a key " " will light. The oven will display "0:00" or current time.

Lock quitting: In locked state, open the ove door, there will be a long "beep" denoting that the lock is releasedand " " will go out.

19. Display Specification

(1) In stand by mode, the oven will display clock and " : " will flash.

(2) In function setting state, the oven will display the related setting.

(3) In the operation and suspending state, the oven will display the residual cooking time.

Maintenance

Troubleshooting

Normal	
Microwave oven interfering TV reception	Radio and TV reception may be interfered when microwave oven operating. It is similar to the interference of small electrical appliances, like mixer, vacuum cleaner, and electric fan. It is normal.
Dim oven light	In low power microwave cooking, oven light may become dim. It is normal.
Steam accumulating on door, hot air out of vents	In cooking, steam may come out of food. Most will get out from vents. But some may accumulate on cool place like oven door. It is normal.
Oven started accidentally with no food in.	It is forbidden to run the unit without any food inside. It is very dangerous. Operation in this manner is likely to damage the appliance.

Trouble	Possible Cause	Remedy
Oven can not be started.	(1) Power cord not plugged in tightly.	Unplug. Then plug again after 10 seconds.
	(2) Fuse blowing or circuit breaker works.	Replace fuse or reset circuit breaker (repaired by professional personnel of our company)
	(3) Trouble with outlet.	Test outlet with other electrical appliances.
Oven does not heat.	(4) Door not closed well.	Close door well.
Glass turntable makes noise when microwave oven operates	(5) Dirty roller rest and oven bottom.	Refer to "Maintenance of Microwave" to clean dirty parts.

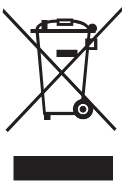

The symbol on the product, or on the documents accompanying the product, indicates that this appliance may not be treated as household waste. Instead it shall be handed over to the applicable collection point for the recycling of electrical and electronic equipment.
Disposal must be carried out in accordance with local environmental regulations for waste disposal.
For more detailed information about treatment, recovery and recycling of this product, please contact your local city office, your household waste disposal service or the shop where you purchased the product.
Before scrapping, cut off the mains cord so that the appliance cannot be connected to the mains.

用户手册

MWL1093

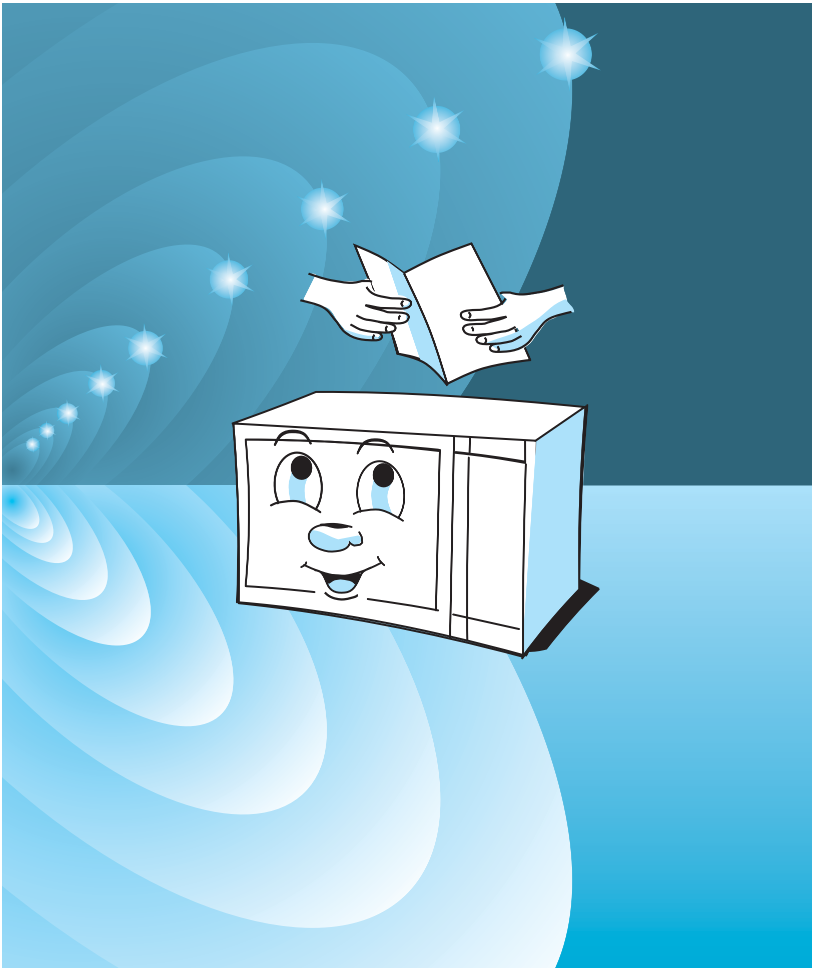

微波爐

用戶手册

型號：MWL1093

使用微波爐之前請仔細閱讀用戶手册，並請妥善保管。

按照說明操作可保證設備多年的使用期限。

請妥善保管

避免可能暴露于過多微波能量的注意事項：

(a) 爐門打開時請勿實施操作，否則您可能會受微波能量的輻射傷害。請勿打破或損壞安全連鎖裝置。

(b) 請勿在微波爐前面和爐門之間放置任何物體，或使污物或清潔劑殘留聚積在密封表面。

(c) 警告：若爐門或爐門封條已損壞，在專業人員維修之前請勿操作。

附錄：

若設備沒有得到很好的清潔維護，其表面可能會受到侵蝕，從而影響設備的使用壽命並導致危險狀態。

規格

型號：	MWL1093
額定電壓：	220V -230V / 50Hz
額定輸入功率（微波）:	1450W
額定輸出功率（微波）:	900W
額定輸入（燒烤）	1100W
額定輸入（對流）:	2500W
容量：	30 升
轉盤直徑：	315 毫米
外形尺寸：	520x510x335 毫米
淨重：	約 18.5 公斤

安全方面的注意事項

使用設備時，爲減少火灾、觸電、對人造成的傷害或暴露于過量微波能量的危險，請遵守以下基本注意事項：

1. 在微波爐中加熱飲品或清水時，即使過度加熱，甚至超過沸點，也未必會出現沸騰的氣泡，但是液體却可能會突然溢出造成燙傷。爲避免發生上述情況，請遵守以下幾點：

1）避免使用窄小瓶頸的容器。

2）將容器放進爐內之前請先攪動液體，並將茶匙留在容器內。

3）流質食物加熱後，請放置一段時間再加以攪動方才小心將容器從微波爐中取出。

2.警告：除專業人員外，任何擅自進行涉及到外罩拆卸的服務或維修操作均可能帶來危險。該外罩可保護使用者免受暴露于微波帶來的危害。

3.警告：只有在已經提供充分的指導以至於兒童能够采用安全的方法使用微波爐，並且明白不正確的使用會造成爲危險時，才可允許兒童在無人監控的情況下使用微波爐。

4.警告：在組合模式下操作時，由於加熱會産生高溫，故小孩只能在大人監督下才可使用該微波爐。（僅限於燒烤系列）

5.請使用適合於微波爐中使用的器皿。

6.微波爐需定期清洗，任何殘留的食物均需清理乾淨。

7.閱讀並遵從“避免可能暴露於過多微波能量的注意事項”。

8.當在塑料或紙質容器內加熱食物時，請密切注意微波爐，因爲有著火的可能。

9.若發現有冒烟，請關閉或拔掉微波爐電源，保持爐門關閉狀態以便熄滅火焰。

10.請勿過度烹調食物。

11.請勿將爐腔用作儲存之用。請勿在微波爐內存放食物，比如麵包或餅乾等。

12.將紙質或塑料容器/袋放入微波爐之前，請將金屬扎帶和金屬提手取下。

13.請按照隨附安裝說明安裝或放置微波爐。

14.微波爐不能用來加熱帶殼的鮮蛋或已煮熟的蛋，因爲它們在用微波加熱時甚至在加熱之後可能會發生爆炸。

15.請勿將微波爐用作說明書規定以外的其他用途。勿在器具內使用腐蝕性化學藥品或氣體。此微波爐專爲加熱食物而設計，並不適於工業或實驗用途。

16.若電源軟綫損壞，則必須由製造商、服務代理或同樣具有資格的專業人員更換，以避免産生危害。

17.切勿將微波爐放置在室外或在室外使用。

18.請勿在有水附近、潮濕的地下室或泳池附近操作。

19.器具操作時，可接觸表面的溫度可能較高。使用時表面溫度會變得很燙。請將軟綫放置遠離熱表面，請勿覆蓋微波爐的任何通風口。

20.請勿將軟綫懸挂於桌子或櫃檯的邊緣。

21.未保持微波爐清潔可能會導致表面受到惡化損壞，影響器具的使用壽命並可能導致危險的情況發生。

22.在嬰兒食物器皿中加熱食物或流質食物後，在喂食之前請先將食物加以攪拌並檢查溫度，確保熱力分布均勻和避免燙傷或灼傷的危險。確保加熱之前已將蓋子與奶嘴取出。

23.此器具不適用於身體、感官或精神上有缺陷或缺少經驗和知識的人（包括兒童）使用，除非在對他們安全負責的人的監督或指導下使用。

24.兒童使用時需有大人監督，確保他們不會將微波爐當作玩具玩。

25.微波爐不可置於橱櫃內，已在橱櫃內測試過除外。

26.微波爐不可通過外部計時器或遙控系統進行操作。

27.警告：爲避免可能的觸電，在更換燈之前，確保微波爐已關閉。

28.使用時可接觸部位可能會變燙。小孩應遠離蒸汽。請勿使用清潔器。

29.儲放櫃表面可能會變熱。

30.請勿使用粗糙的擦洗劑或鋒利的金屬刮刀清洗爐門玻璃，否則可能刮傷表面，甚至導致玻璃破碎。

31.使用過程中器具會變熱。操作時請小心謹慎，避免觸碰爐內的發熱絲。

32.請使用推薦的溫度傳感器（因爲微波爐提供有使用溫度傳感器的工具）

33.器具背面需靠墻放置。

減少對人造成傷害的危險

接地安裝

危險

觸電危險

觸摸某些內部元件可能會造成嚴重的個人傷害甚至造成死亡。請勿擅自拆卸。

警告

觸電危險

接地的不正確使用可導致觸電。器具在正確安裝和接地之前請勿將其插入電源插座。

該器具必須接地。如果發生綫路短路，接地可通過爲電流提供排電綫減少觸電的危險。器具附帶有一條具有接地插頭的接地綫的軟綫。該插頭需插入已正確安裝和接地的電源插座。

器具必須進行接地。不遵守該要求而造成對人、動物或物體的任何傷害，製造商概不負責。

若對接地說明不完全明白或懷疑器具是否正確接地，可咨詢合格電工或修護人員。

清洗

清洗之前，確保微波爐已與電源斷開。

1. 使用稍微濕點的濕布後，清潔微波爐內部。
2. 在肥皂水中用常規方法清洗附件。
3. 門框和封口以及附近部件變髒時，需用濕布小心清洗。

BS 三扁插頭

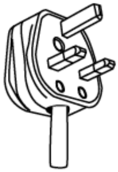

器皿

注意

個人傷害危險

除專業人員外，任何擅自進行涉及到外罩拆卸的服務或維修操作均可能帶來危險。該外罩可保護使用者免受暴露於微波能量帶來的危害。

參閱“微波爐中可使用與應避免的材料”的說明。其中可能有某些非金屬器皿不可用於微波加熱。如有疑問，可按以下步驟對器皿進行測試。

器皿測試：

1. 在微波專用容器中加入一杯冷水（250 毫升）以及測試器皿
2. 以最大火力烹調 1 分鐘
3. 小心觸摸下器皿。如果空器皿變熱，請勿將其用於微波烹調。
4. 烹調時間請勿超過 1 分鐘。

微波爐中可使用的材料

器皿	備注
鋁箔	僅作保護之用。可將小塊錫箔覆蓋於肉或家禽的較薄部位，以防止過度烹調。如果過于接近爐壁，可能造成錫箔擊穿。錫箔需離爐壁至少 1 英寸（2.5 厘米）。
燒烤盤	遵從廠商說明。燒烤盤底部必須在轉盤上面至少 3/16 英寸（5 毫米）。不正確的使用可能會使轉盤破裂。
餐具	僅限於微波安全型餐具。遵從廠商說明。請勿使用破裂或有缺口的盤或碟。
玻璃瓶	任何情況下均應取下蓋子。僅用於加熱食物至剛熱狀態。大多數玻璃瓶 並不耐熱，可能會破裂。
玻璃器具類	僅限於耐熱微波爐專用玻璃器具。確保無金屬包邊。請勿使用破裂或有缺口的盤或碟。
烤箱袋	遵從廠商說明。請勿用金屬綫系緊，預留一些縫隙以便蒸汽溢出。
紙盤或紙杯	僅用於短時間的烹飪或加熱。烹飪時請勿離開。
生活用紙	用于覆蓋於食物進行重新加熱和吸收脂肪。僅用於有人監控的短時間烹飪。
羊皮紙	用于覆蓋食物，防止食物發生潑濺或在蒸汽加熱時用作包裹
塑料	僅限於微波安全型。遵從廠商說明。必須標示“微波安全”。某些塑料容器在裏面的食物變熱時即變軟。可煮袋和密封包裝的塑料袋須按包裝上的指示切開、刺破或開孔。
塑料保鮮膜	僅限於微波安全型。用於在烹調過程中包裹食物，以保持水分。請勿將塑料保鮮膜接觸食物。
溫度計	僅限於微波安全型。（肉和糖果溫度計）
食品蠟紙	用於覆蓋食物，防止食物發生潑濺和保持水分

微波爐中應避免的材料

器皿	備注
鋁盤	可能引起擊穿。將食物轉移至微波專用盤。
帶金屬提手的食品紙盒	可能引起擊穿。將食物轉移至微波專用盤。
金屬或金屬包邊的器皿	金屬會隔離微波能量接觸食物。金屬包邊會引起擊穿。
金屬扎口綫	可能引起擊穿和引起爐內著火。
紙袋	可能引起爐內著火。
塑料泡沫	塑料泡沫暴露於高溫時可能會溶化或污染裏面的液體。
木材	木材在微波爐中使用時會燒幹，可能會裂開或破裂。

設置微波爐

各部件和附件的名稱

從紙箱和爐腔中取下微波爐和所有材料。

微波爐隨附有以下附件：

玻璃托盤 1

轉盤圈 1

說明書 1

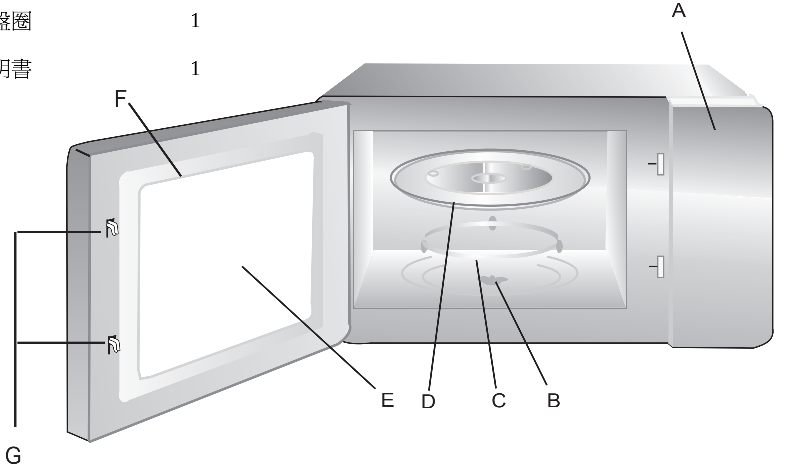

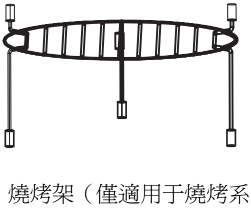

燒烤架（僅適用于燒烤系列）

A) 控制面板
B) 轉盤軸
C) 轉盤圈
D) 玻璃托盤
E) 觀察窗口
F) 爐門部件
G) 安全連鎖裝置
H) 燒烤架（僅適用于燒烤系列）

轉盤安裝

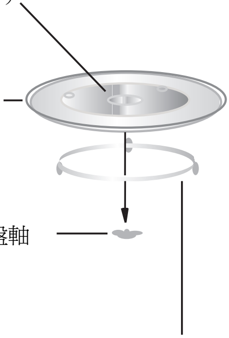

a. 請勿倒置玻璃托盤。玻璃托盤須能輕鬆轉動。

b. 烹飪過程中玻璃托盤和轉盤圈都必須使用。

c. 烹飪時所有食物和裝食物的容器都應放置於玻璃托盤上面。

d. 若玻璃托盤或轉盤圈破裂或損壞，請聯繫最近的授權服務中心。

工作臺面安裝

取下所有包裝材料和附件。

檢查微波爐是否有損壞，如凹痕或破損的爐門等。如果微波爐有損壞，請勿繼續安裝。

烤箱：取下烤箱內部表面的任何保護膜。請勿弄掉依附在爐腔上用於保護磁電管的淺褐色雲母。

安裝

1. 選擇一個進氣口和/或出氣口均有足够空間的水平面。

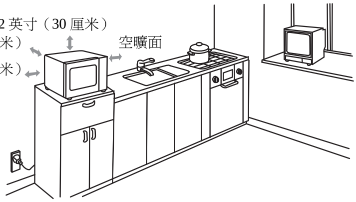

微波爐與任何相鄰墻面間的最小空隙要求爲 30 英寸（7.5 厘米）。其中一個面必須爲空曠面。

（1） 微波爐上面至少留 12 英寸（30 厘米）的空隙。

（2） 請勿從微波爐底部取下支架。

（3） 阻塞進氣口和/或出氣口會損害微波爐。

（4） 微波爐應儘量遠離收音機和電視擺放。微波爐工作時會對你的收音機或電視的接收信號造成干擾。

2. 請將微波爐插入標準家用電源。確保電源的電壓和頻率與銘牌標簽上標示的電壓和頻率相同。

警告：請勿將微波爐安裝於爐灶面或其他發熱電器上。若安裝於熱源附近或上面，微波爐可能會受到損壞，保證書將無效。操作過程中可接觸表面可能會變燙

設備在操作時，燒烤架上可接觸表面的溫度可能很高。

操作

控制面板和功能

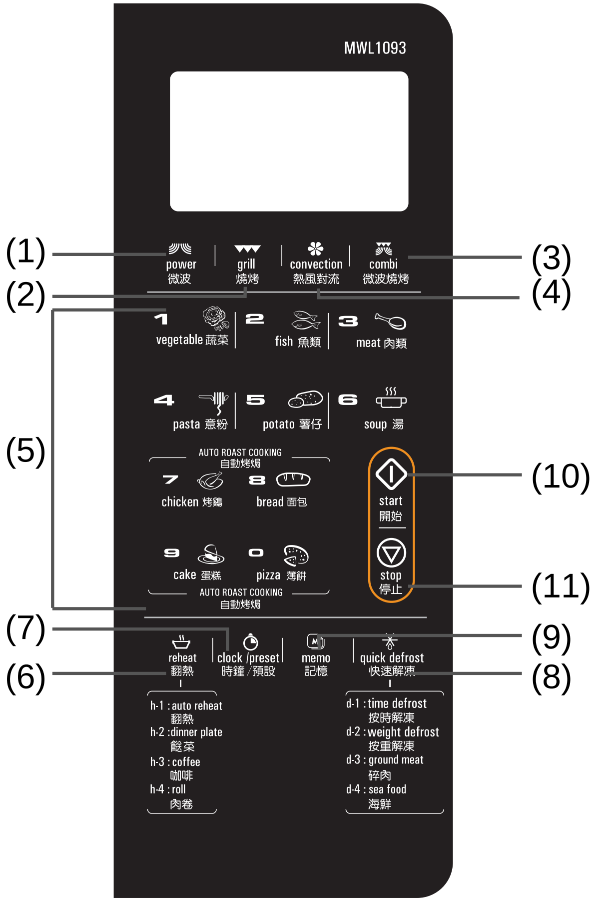

（1） 微波

（2） 燒烤

（3） 微波燒烤

（4） 熱風對流

（5） 自動菜單

（6） 翻熱

（7） 時鐘 /預設

（8） 快速解凍

（9） 記憶

（10） 開始

（11） 停止

操作說明

1.時鐘設置

微波爐通電後，显示屏會顯示"0:00”， 蜂鸣器會響一聲。

輸入的時間值應在 0:00-23:59（24 小時制），1:00-12:59（12 小時制）。

比如，要設置 12:12

（1） 按 1 次為 24 小時制，按 2 次則爲 12 小時制，同時“24H”或“12H”將顯示在控制面板上。

（2） 依次按數字按鈕“1”, “2”, “1”, “2” 。

（3） 按結束時鐘設置。“:”將會閃爍，時間會變亮

注意：1）若時鐘未設置，開機時該功能將不起作用。

2）時鐘設置過程中，若按 按鈕，微波爐將自動返回至先前狀態。

2.微波烹調

選擇不同的微波火力並按您需求設置烹調時間。有 5 種不同的火力可選。不斷按 即可選擇火力。

例如：若想用 80%的火力烹調 10 分鐘，可按以下步驟進行操作。

1） 按 1 次 ，显示屏將顯示“P100”， 指示燈將變亮。

2） 再按 1 次 選擇 80%的火力，显示屏則將顯示"P80”

3） 依次按數字按鈕“1”, “0”, “0”, “0”， 显示屏將顯示"10:00”

4） 按 開始烹飪，“:”將會變亮， 指示燈開始閃爍。

注意： 鍵盤按觸說明

按觸說明	顯示	火力
1	P100	100%
2	P80	80%
3	P50	50%
4	P30	30%
5	P10	10%

3.燒烤

例如：若想用 100%的燒烤火力烹調 35 分鐘，可按以下步驟進行操作。

1） 按 鍵，面板將顯示“G-1”同時 將變亮。

2） 依次按數字按鈕“3”, “5”, “0”, “0”，面板將顯示"35:00”

3） 按 開始烹飪。 將閃爍，“:”將變亮。

注意：如果一半燒烤時間過後微波爐發出兩次聲音，屬於正常現象。

爲獲得更好的燒烤效果，您需打开炉门將食物翻轉然後再關上門。如無任何其他操作，微波爐將繼續燒烤。

4. 熱风對流（帶有預熱功能）

1）按 1 次 鍵，面板將顯示“140”。同時“℃"和 將變亮。（不斷按 鍵即可選擇溫度）

2）按 開始烹飪。當溫度達到預訂溫度時溫度數字將會閃爍，警報器會響 2 次，提示您將食物放進微波爐內。

3）依次按數字按鈕“4”, “0”, “0”, “0”，面板將顯示"40:00”

4）按 開始烹飪。 將閃爍，“:”將變亮。

5. 熱风對流（無預熱功能）

1）按 1 次 鍵，面板將顯示“140”。 同時“℃"和 將變亮。（不斷按 鍵即可選擇溫度）

2）依次按數字按鈕“4”, “0”, “0”, “0”，面板將顯示"40:00”

3）按 開始烹飪。 將閃爍，“:”將變亮。

注意： 鍵 按觸說明

按觸說明	顯示	對流
1	140℃	●
2	150℃	●

3	160℃	●
4	170℃	●
5	180℃	●
6	190℃	●
7	200℃	●
8	210℃	●
9	220℃	●
10	230℃	●

6.混合烹調

例如：若想用混合模式烹調（C-1）40 分鐘，可按以下步驟進行操作。

1) 按 1 下 鍵，面板將顯示“C-1”，同時和 都將變亮。

2) 依次按數字按鈕“4”, “0”, “0”, “0”，面板將顯示"40:00”

3) 按 開始烹飪。和 將閃爍，“:”將變亮。

注意： 鍵 按觸說明

按觸說明	顯示	微波火力	燒烤火力	對流火力
1	C-1	●		●
2	C-2	●	●	
3	C-3		●	●
4	C-4	●	●	●

7. 時鐘/預調功能

例如：要在 12:12 開始烹飪

（1） 首先設置時鐘，然後設置想要的烹飪程序（不含解凍功能）。

（2） 按顯示 0:00

（3） 依次按“1”, “2”, “1”, “2”

（4） 按 確定設置，設備將返回至時鐘狀態。

（5） 時間到即開始烹飪，同時“:”將變亮。

8.翻热功能

1）按鍵，面板將顯示"h-1"並不斷閃爍。和 "AUTO" 指示燈將變亮。(不斷按鍵選擇您所要的烹飪程序）

2）按 確定，"h-1"將顯示。

3）按鍵，面板將顯示"150"。同時 和 "AUTO" 以及 "g" 指示燈將變亮。(不斷按鍵選擇食物重量）

4）按 開始烹飪。

菜單	重量（克）	顯示
h-1 翻熱	150	150
	250	250
	350	350
	450	450
	600	600
h-2 餸菜	250	250
	350	350
	450	450
h-3 咖啡	1（約 240 克）	1
	2（約 480 克）	2
	3（約 720 克）	3
h-4 肉卷	1（約 70 克）	1
	2（約 140 克）	2
	3（約 210 克）	3

9.按時解凍

1）按 1 次 ，面板將顯示“d-1”

2）輸入烹調時間。 和 指示燈將變亮。（烹調時間最大值爲 99 分鐘 99 秒）

3）按 開始解凍。 和 指示燈將開始閃爍。

10.按重解凍

1）按 2 次 ，面板將顯示“d-2”

2）輸入食物的重量值（範圍爲 100-2000 克）

3）按 開始解凍。 和 指示燈將開始閃爍， "g" 指示燈將熄滅。

11.解凍碎肉

1）按 3 次 ，面板將顯示“d-3”

2）輸入食物的重量值（範圍爲 100-2000 克）

3）按 開始解凍。 和 指示燈將開始閃爍。

12.解凍海鮮

1）按 4 次 ，面板將顯示“d-4”

2）輸入食物的重量值（範圍爲 100-2000 克）

3）按 開始解凍。 和 指示燈將開始閃爍。

13.自動菜單烹飪

數字鍵 0-9 分別對應 10 種不同的烹飪對象：

按鍵	烹飪	按鍵	烹飪	按鍵	烹飪	按鍵	烹飪
1	蔬菜	4	意粉	7	烤鷄	0	薄餅
2	魚類	5	薯仔	8	面包		
3	肉類	6	湯	9	蛋糕		

例如：烹飪 350 克蔬菜

（1） 按下 按鈕， 和 "AUTO"將變亮。

（2） 再次按下 按鈕選擇重量，面板將顯示“350”，同時 "g"、 和 "AUTO"將變亮。

（3） 按 開始烹飪。"g" 將熄滅，時間開始倒數， 和 "AUTO"開始閃爍。

自動菜單圖

菜單	重量（克）	應按次數	顯示
	150	1 次	150
	350	2 次	350
	500	3 次	500
	150	1 次	150
	250	2 次	250
	350	3 次	350
	450	4 次	450
	650	5 次	650
	150	1 次	150
	300	2 次	300
	450	3 次	450
	600	4 次	600
	50（450 克冷水）	1 次	50
	100（800 克冷水）	2 次	100
	150（1200 克冷水）	3 次	150
	1（約 460 克）	1 次	1
	2（約 230 克）	2 次	2
	3（約 690 克）	3 次	3
	200 毫升	1 次	200
	400 毫升	2 次	400
	600 毫升	3 次	600
	500	1 次	500
	750	2 次	750
	1000	3 次	1000
	1200	4 次	1200
	50	1 次	50
	100	2 次	100
	150	3 次	150
	475	1 次	475
	200	1 次	200
	300	2 次	300
	400	3 次	400

注意：蛋糕烹飪菜單在對流烹飪項下，具有 180℃加熱功能。首先您需按照自動菜單操作進行預熱，當達到特定溫度時微波爐將會停止工作 並發出聲音提示您打開爐門放入蛋糕，然後按 開始烹調。

14.記憶功能

1）按 鍵幾次可分別設置“記憶 1”到“記憶 3”程序，显示屏將顯示“1”到“3”。

2）設置您想要的 1 個或 2 個階段的程序。

例如：a）按 1 下 鍵選擇 100%火力。

b）依次按數字鍵“1”, “0”, “0”, “0”調整烹調時間。

3）按 鍵保存所設置的記憶程序，或按 開始烹飪，同時程序將自動保存。

4）下次想要采用已設置好的記憶程序進行烹飪時，只需按一下 鍵選擇所需程序，然後按 開始即可。

15.多階段烹調

烹調最多可設置 2 段。如果其中一個階段爲解凍，則必須放在第一階段，此處不可設置自動烹調功能。警報器在每個階段結束後會響一聲，然後開始下一階段，此處亦不可設置自動烹調功能。

例如：如果你想用 100%火力烹調食物 10 分鐘+80%火力烹調 15 分鐘。可按以下步驟操作：

1） 按 1 下 鍵選擇 100%火力。

2） 依次按數字鍵“1”, “0”, “0”, “0”調整烹調時間。

3） 按 2 下 鍵選擇 80%火力。

4） 依次按數字鍵“1”, “5”, “0”, “0”調整烹調時間。

5） 然後按 開始烹調。

16.快速烹調

當微波爐處於等待狀態時，按 鍵開始以最大火力烹調 30 秒。（最大設置爲 99 分 99 秒）

當微波爐處於混合烹調狀態時，按 鍵以增加 30 秒烹調時間。（在解凍 d-2, d-3, d-4，多階段烹調或自動菜單狀態時無效）

17.查詢功能

（1）在烹調狀態下，按下 鍵，當前火力將會顯示 2-3 秒。

按下 鍵，"C-1"-"C-4" 將會顯示 2-3 秒。

按下 鍵，"140 ^{0}C"-"230 ^{0}C" 將會顯示 2-3 秒。

（2）在烹調狀態下，按下 鍵可查詢烹調時間。烹調時間將會閃爍 2-3 秒。

（3）在預設狀態下，按下 鍵可查詢延遲開始烹調的時間。預設時間將閃爍 2-3 秒。

18.兒童安全鎖功能

鎖定：在待机模式下，爐門關閉時，若在待機狀態 1 分鐘內或烹調結束後 11 分鐘內無操作，微波爐進入安全鎖狀態，面板上鑰匙標志 將會變亮。微波爐將會顯示“0:00”或當前時間。

解鎖：在鎖定狀態下打開爐門，您將聽到一聲長聲“嗶”，表示鎖已解開，同時 將會熄滅。

19.顯示

（1）待機狀態下，显示屏將會顯示時鐘，“:”會不斷閃爍。

（2）功能設置狀態下，显示屏將會顯示相應的設置。

（3）操作和暫停狀態下，显示屏將會顯示剩餘烹調時間。

維修保養

故障診斷與維修

下列情況均屬正常	
微波爐干擾電視信號接收	微波爐工作時，收音機和電視的信號接收可能會受到干擾。同樣會對小家電如混合器、真空吸塵器和電風扇造成干擾。均屬正常現象。
微波爐燈光暗弱	低火力烹調時，微波爐燈管可能會變暗弱，屬正常現象。
蒸汽積聚爐門，有熱風從排氣口排出	烹調時，食物中會冒出蒸汽。大多數會從排氣口排出，但一些可能會聚集在較冷的地方，比如爐門。均屬正常現象。
爐內沒有食物時微波爐意外開始操作	禁止爐內無任何食物時操作該微波爐。此操作非常危險，很可能會損壞微波爐。

故障	可能原因	解決方法
微波爐無法啓動	（1）電源綫沒有插緊	拔下插頭，待 10 秒鐘後重插
	（2）保險絲燒斷或斷路器工作	更換保險絲或重新設置斷路器(由本公司專業人員負責維修）
	（3）電源插座有問題	用其他電器測試插座是否有問題
微波爐不加熱	（4）爐門未關好	關好爐門
微波爐運行時玻璃轉盤會發出響聲	（5）滾筒支托和微波爐底變髒	參考“微波爐的維修保養”對不潔的部件進行清洗

產品或產品隨附文件上的此標志表示本產品不可視爲家庭廢弃物,相反需將其交至相應的回收點對電氣和電子設備進行回收。

如日後需要弃置，請遵循本地的廢物弃置條例。

有關產品處理，恢復使用和回收的詳細數據，請聯繫本地政府機構、家庭廢弃物處理服務機構或購買本產品的商店。

弃置前請切斷電源綫，使本產品不能連接電源。